TCxy Shift-Only Mini View Camera

User Manual

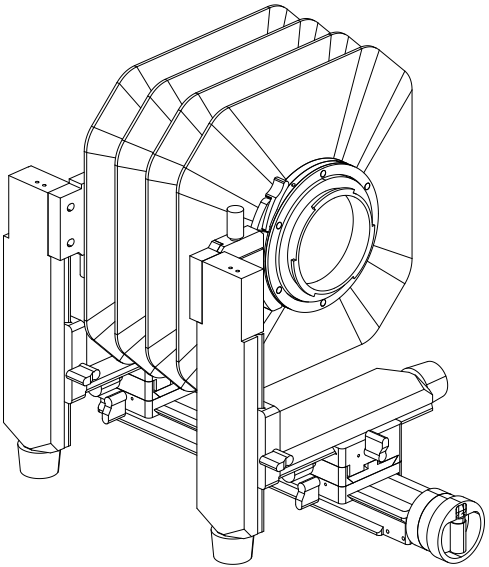

SWEBO

Meet TCxy

Independent front and rear shift and rise/fall refine composition.

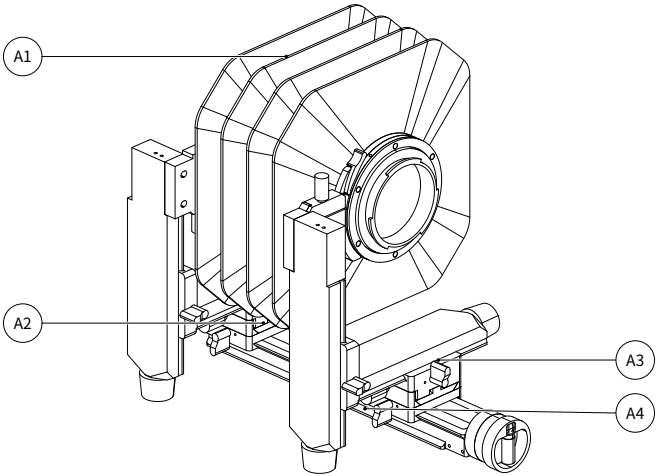

A1 Bellows module

A2 Front standard module

A3 Rear standard module

A4 Focusing rail module

01 Modular platform

250 mm rail • four-fold bellows • net weight 1,655 g

Rail and standards

Secure the support, then fit both standards.

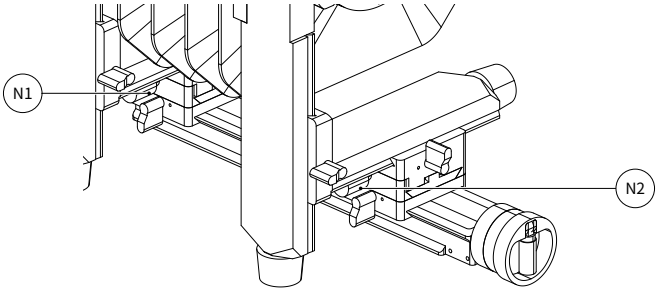

N1 Front module clamp knob N2 Rear module clamp knob

01 Secure the rail

Clamp the base dovetail in a compatible Arca-style clamp, or use the 1/4-inch or 3/8-inch threaded socket.

02 Fit both standards

Seat each standard’s dovetail plate in its carriage clamp. Tighten N1 and N2, then check both connections before letting go.

Bellows and lens board

Support each part and check that both ends are fully seated.

Lens board

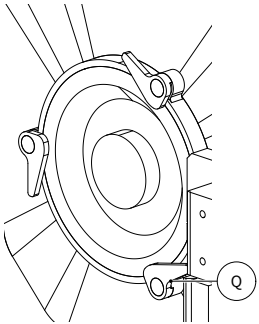

Rear bellows clamp

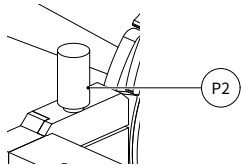

Front bellows clamp

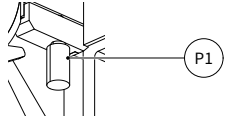

P1 Front bellows clamp knob

P2 Rear bellows clamp knob

Q Lens-board latch

01 Fit the bellows

Seat both ends in their clamps. Tighten P1 and P2, then check that they are secure before letting go.

02 Fit the lens and camera

Seat the matching lens board and secure each Q latch. Attach the selected camera interface and check the connection.

Position and focus

Position the front standard; focus with the rear lead screw.

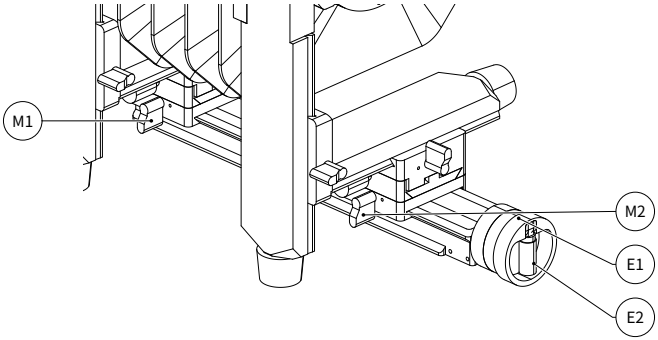

M1	Front carriage lock lever	M2	Rear carriage lock lever
E1	Focusing dial rim	E2	Fold-away crank

01 Position the front

Support the front standard, loosen M1 and slide it along the rail. Retighten M1 at the required position.

02 Fine focusing

Release M2 if locked. Unfold E2 for larger adjustments; turn the largest-diameter rim E1 for fine control. Secure M2 as needed.

Standard scale: 100 divisions per turn; travel is 0.04 mm per division.

Horizontal shift

Move the lens or camera sideways to adjust composition.

±30 mm at each standard

Front

Rear

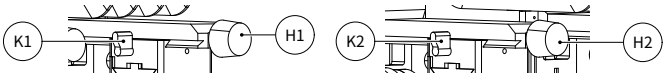

H1	Front shift knob	K1	Front shift lock lever
H2	Rear shift knob	K2	Rear shift lock lever

01 Release the lock

Loosen K1 or K2 if the corresponding lever is locked.

02 Adjust the position

Turn H1 or H2 while checking the image. The lead screw holds the setting; use the lock lever for added security as needed.

Rise and fall

Move the lens or camera up or down to position the subject.

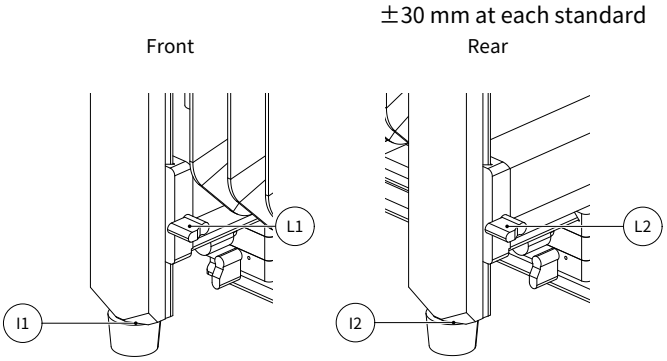

I1	Front rise/fall knob	L1	Front rise/fall lock lever
I2	Rear rise/fall knob	L2	Rear rise/fall lock lever

01 Support and release

Support the standard being adjusted. Loosen L1 or L2 if the corresponding lever is locked.

02 Adjust the height

Turn I1 or I2 while checking composition. The lead screw holds the setting; use the lock lever for added security as needed.

Portrait or landscape

Press the button and rotate the camera 90°; it locks automatically.

90°

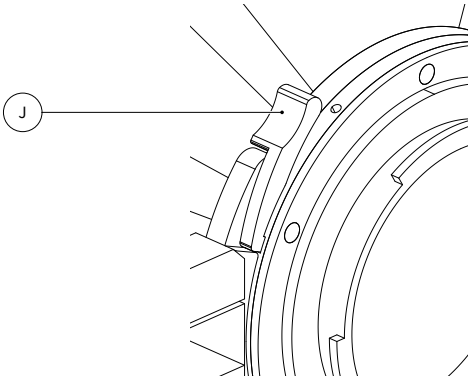

J Camera rotation release button

01 Support and press

Support the camera and press the camera rotation release button J.

02 Rotate and check

Rotate the camera 90°. It locks automatically in position. Check that it is secure before letting go.

Architecture and stitching

Use linear movements, checking composition and focus as you go.

01 Set a starting point
Secure the support and connections. Set the movement scales to zero, then establish focus.

02 Compose architecture
Keep the camera level. Use horizontal shift and rise/fall to place the building in the frame and control converging verticals.

03 Shift the rear for stitching
Keep the lens stationary. Move the rear standard sideways to capture overlapping frames, then combine them in stitching software.

04 Check coverage
Check the image edges and focus within the lens image circle. Usable coverage depends on the lens and camera configuration.

Disassembly and storage

Four modules for tool-free assembly and disassembly.

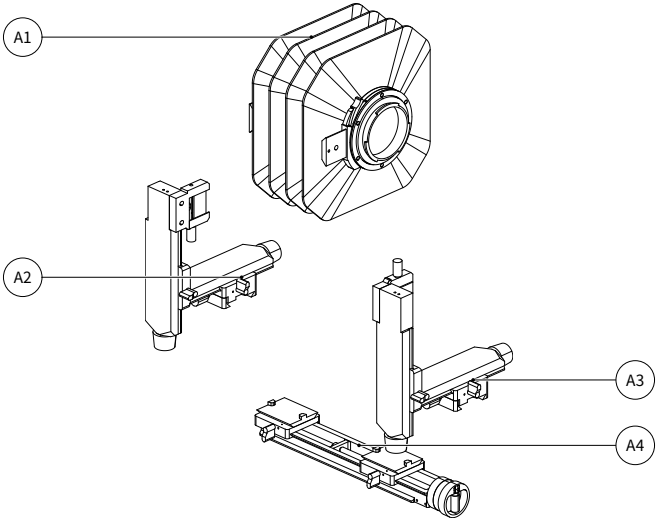

A1	Bellows module	A2	Front standard module
A3	Rear standard module	A4	Focusing rail module

Keep the bellows and both end fittings together.
Store the rail, carriages and focusing dial as one module.

Separate and reassemble

Separate complete modules at the dovetail clamp connections.

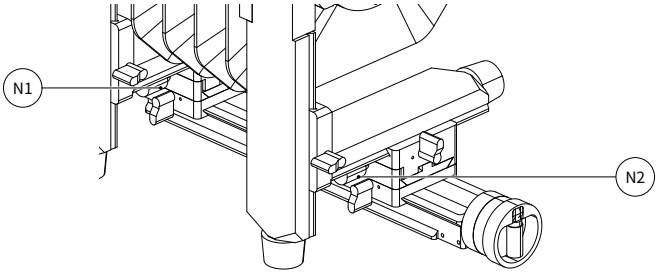

N1 Front module clamp knob N2 Rear module clamp knob

01 Remove equipment and bellows

Remove the camera and lens. Support the bellows, loosen P1 and P2, then lift it away.

02 Separate the standards

Support each standard, loosen N1 or N2 and withdraw it from the corresponding dovetail connection.

03 Reassemble and check

Clean mating surfaces. Fit the standards and bellows, then the camera and lens. Check every connection. Fold the crank in for storage.

Shanghai Shebao Optoelectronic Technology Co., Ltd.
Muhua North Road, Fengxian District
Shanghai, China
www.swebo.us
swebochina@gmail.com