TCS20

Compact Mini View Camera

User Manual

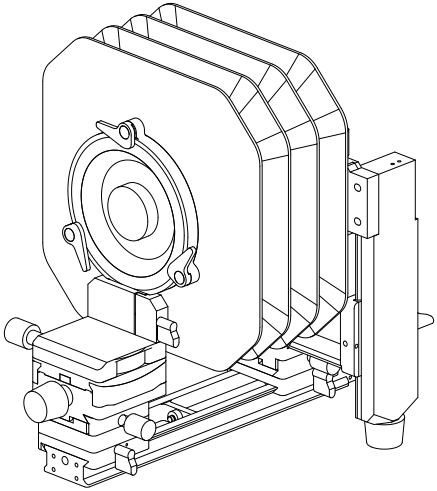

SWEBO

Front connections

Secure the rail and front standard before fitting bellows and board.

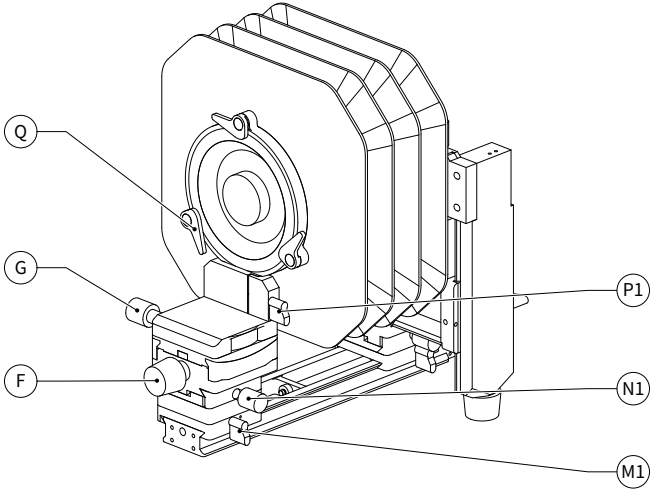

F	Front tilt knob	G	Front swing knob
P1	Front bellows clamping lever	N1	Front mounting clamp knob
M1	Front rail locking lever	Q	Lens-board latch

N1 clamps the standard; P1 clamps the bellows. Engage all three board latches Q.

Rear connections

Support the rear standard and bellows, then fit the matching mount.

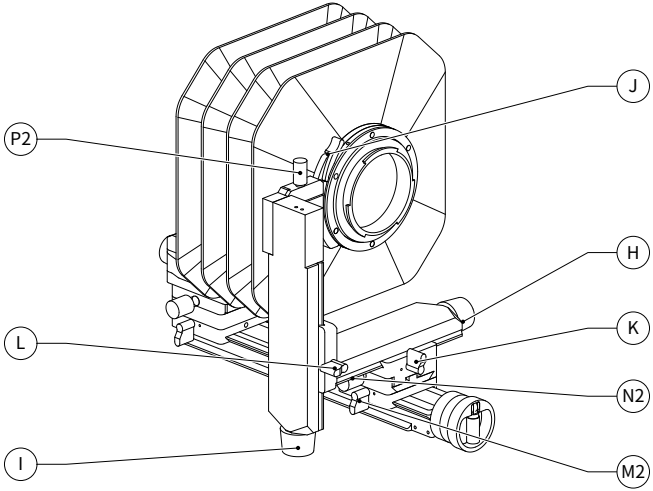

H	Rear shift knob	K	Shift locking lever
I	Rear rise/fall knob	L	Rise/fall locking lever
P2	Rear bellows clamp knob	N2	Rear mounting clamp knob
M2	Rear rail locking lever	J	Camera rotation release button

N2 clamps the standard; P2 clamps the bellows. M2 locks the rail carriage.

Position and focus

Lock the front after positioning; focus with the rear drive.

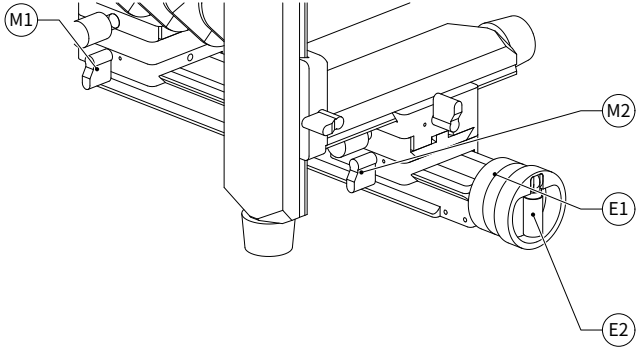

M1	Front rail locking lever	M2	Rear rail locking lever
E1	Focusing dial rim	E2	Fold-away crank

01 Position the front

Release M1, slide the front into place, then tighten M1.

02 Focus the rear

Release M2. Use E2 for larger moves and E1 for fine focus.

Front tilt

Turn F to tilt the front standard.

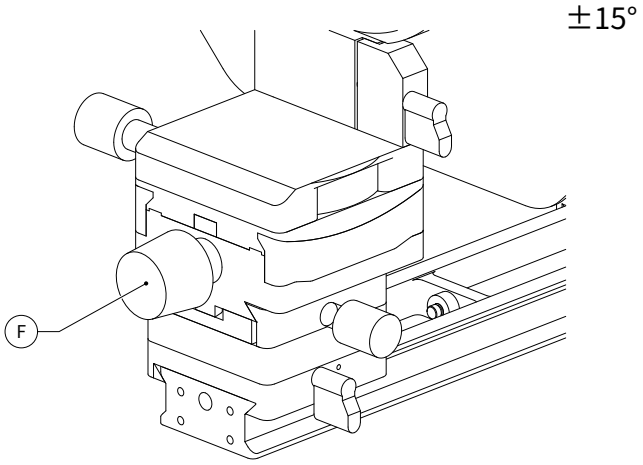

F Front tilt knob

01 Start with a small adjustment

Turn the tilt knob and compare the sharpness of near and far details.

02 Refine the focus

Use rear focusing as needed. The worm drive holds its position.

Front swing

Turn G to change the lens direction horizontally.

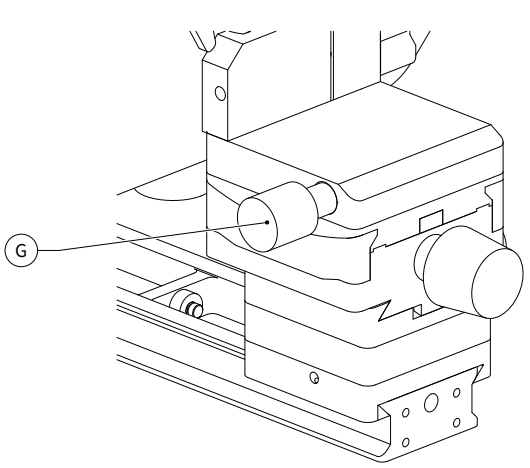

G Front swing knob

01 Adjust the angle gradually

Turn the swing knob in small steps.

02 Check the plane of focus

Inspect the areas that need to be sharp and refocus as needed. The drive is self-locking.

Rear horizontal shift

Turn H to move the camera sideways.

±30 mm

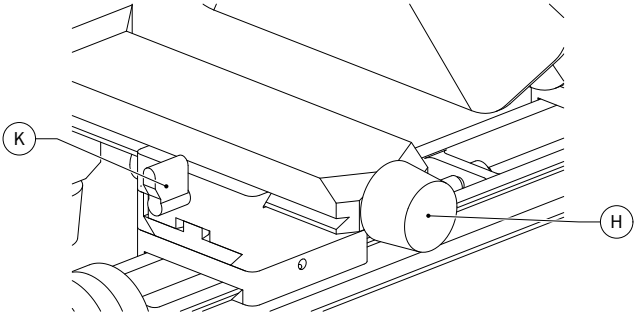

H Rear shift knob

K Shift locking lever

01 Release the lock

Support the assembly; release K if locked.

02 Adjust and check

Turn H to adjust. The lead screw holds position; use K for added security.

Rear rise & fall

Turn I to adjust the height of the camera end.

±30 mm

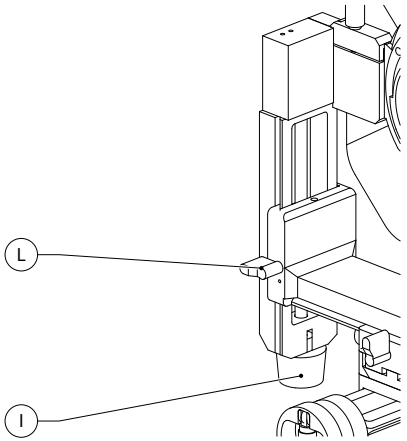

I Rear rise/fall knob

L Rise/fall locking lever

01 Release the lock

Support the assembly; release L if locked.

02 Adjust and check

Turn I to adjust. The lead screw holds position; use L for added security.

Landscape or portrait

Press the button, turn the camera and let it lock automatically.

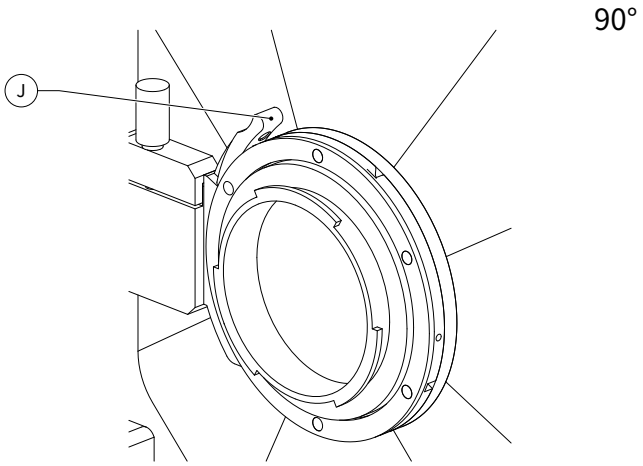

J Camera rotation release button

01 Support and press

Support the camera and press button J.

02 Rotate 90° to lock automatically

Turn the camera body 90°. It locks automatically at the new position. Check before letting go.

Select lens boards and camera mounts for your equipment. Check compatibility with the chosen bellows.

Dismantling & packing

Four modules separate without tools.

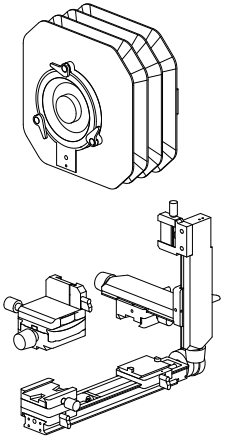

01 Remove the equipment

Detach the camera body and lens first.

02 Remove bellows and standards

Support each module and release its clamp before lifting it off.

03 Pack in the case

Protect the bellows and interfaces. Place all four modules securely in the case.

Specifications & rails

Each focusing option uses its corresponding rail.

Front tilt / swing	±15° / ±20°
Rear shift / rise and fall	±30 mm each
Standard rail / bellows	250 mm / four-fold
Net weight	1300 g

Three rail configurations

Rear lead-screw focusing is standard. Front lead-screw and front rack-and-pinion focusing are options. Lock the rack-and-pinion drive after adjustment.

Reading the scale

Each lead-screw division corresponds to the stated linear travel.

Shanghai Shebao Optoelectronic Technology Co., Ltd.
No. 388 Muhua North Road, Fengxian District
Shanghai, China
www.swebo.us
swebochina@gmail.com