TCM18

Modular Bellows Focusing System

User Manual

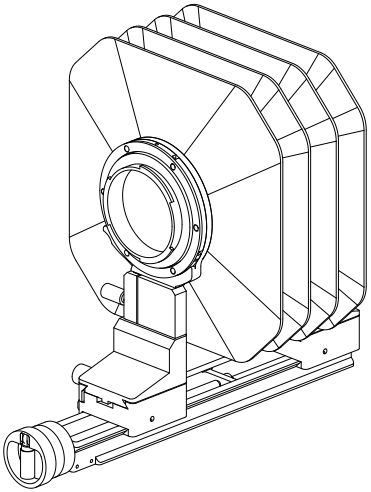

SWEBO

Front connections

Secure the rail before fitting the front support.

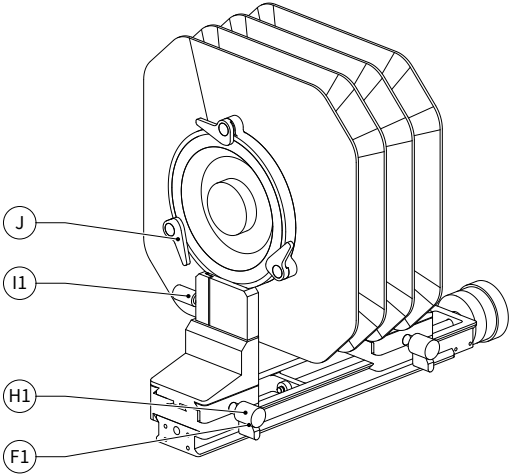

I1	Front bellows clamp knob	H1	Front mounting clamp knob
F1	Front rail locking lever	J	Lens-board latch

01 Secure the front

Clamp with H1; lock the carriage with F1.

02 Fit bellows and board

Clamp the bellows with I1. Engage all three J latches.

Rear connections

Support the assembly while securing each connection.

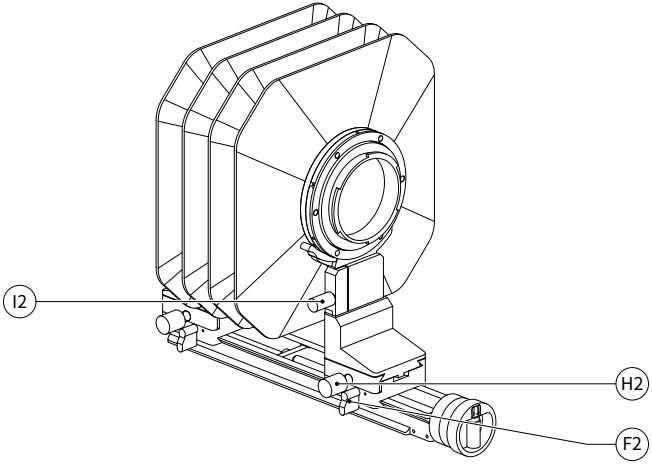

I2 Rear bellows clamp knob H2 Rear mounting clamp knob

F2 Rear rail locking lever

01 Secure the rear

Tighten H2 to clamp the support; secure the rail carriage with F2.

02 Connect the camera

Clamp the bellows with I2, then fit the matching mount and camera.

Dial and crank focusing

Unfold the crank for rapid travel; turn the rim to refine focus.

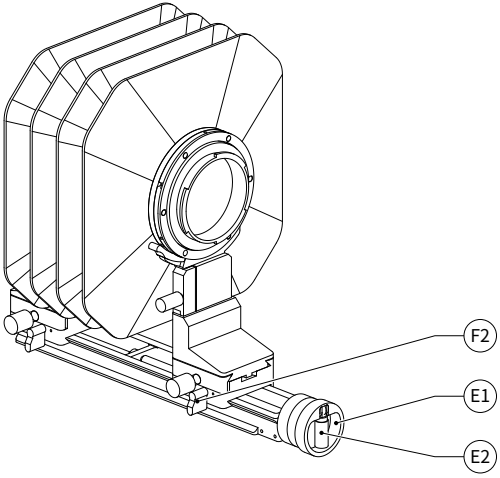

E1 Focusing dial rim

E2 Fold-away crank

F2 Rear rail locking lever

01 Release the drive end

Release F2 if locked before turning the focusing dial.

02 Refine focus

Use E2 for larger moves and E1 for fine focus. Secure F2 when set.

03

Choose the focusing end

Reverse the rail to choose which end the dial drives.

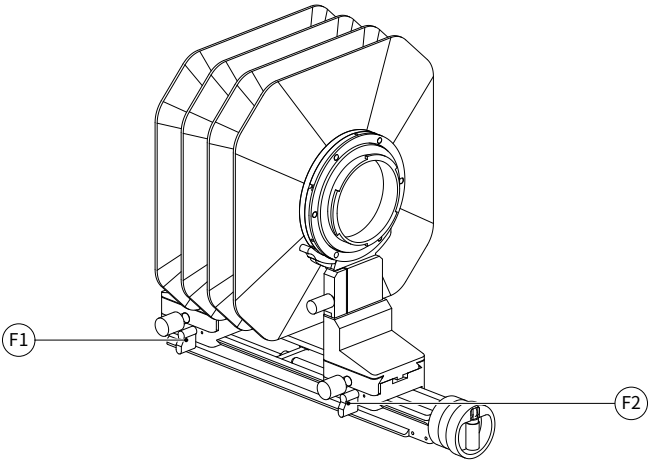

F1 Front rail locking lever

F2 Rear rail locking lever

01 Position the manual end

Release that end's rail lever, slide it into place, then tighten it.

02 Focus with the drive end

Release the drive-end lock and turn the dial while checking focus.

Landscape or portrait

Press the button, turn the camera and let it lock automatically.

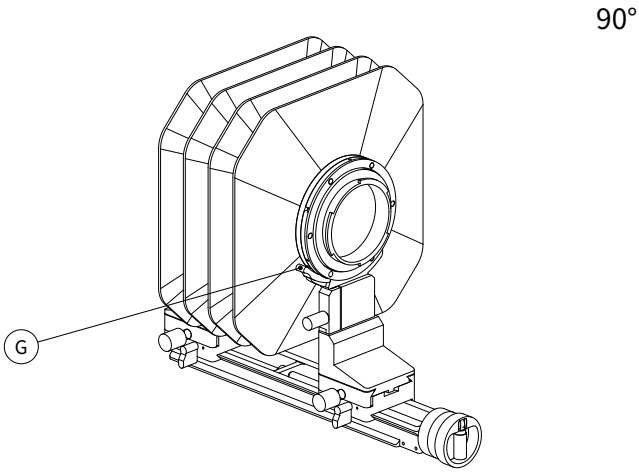

G Camera rotation release button

01 Support and press
Support the camera and press button G.

02 Rotate 90° to lock automatically
Turn the camera body 90°. It locks automatically at the new position. Check before letting go.

Select lens boards and camera mounts for your equipment; verify the complete configuration.

Expansion & packing

Select modules for the movements you need.

Standard rail	250 mm
Standard bellows	Four-fold
Net weight	863 g
Optional lead / increment	1 mm / 0.01 mm

Expand the system

Add the appropriate modules to build a TC18 or shift-only TCxy, retaining the existing rail and bellows.

Pack the modules

Remove the camera and lens first. Support the bellows and carriers as you release each connection and pack.

Shanghai Shebao Optoelectronic Technology Co., Ltd.
No. 388 Muhua North Road, Fengxian District
Shanghai, China
www.swebo.us
swebochina@gmail.com