S2252 ArtsCaptor

User Manual

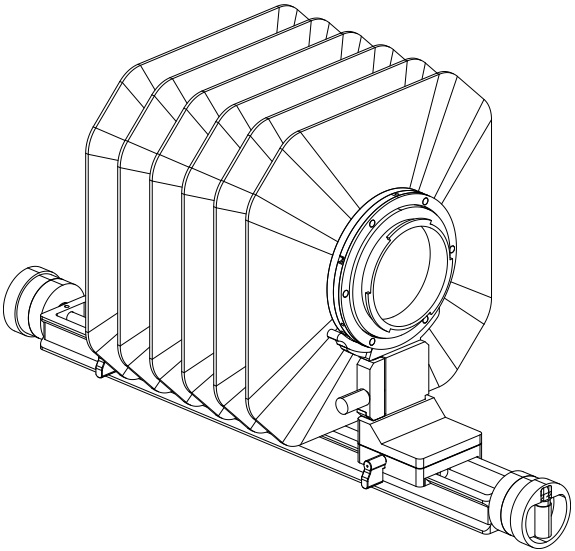

SWEBO

Meet the S2252

A platform for art reproduction and macro photography.

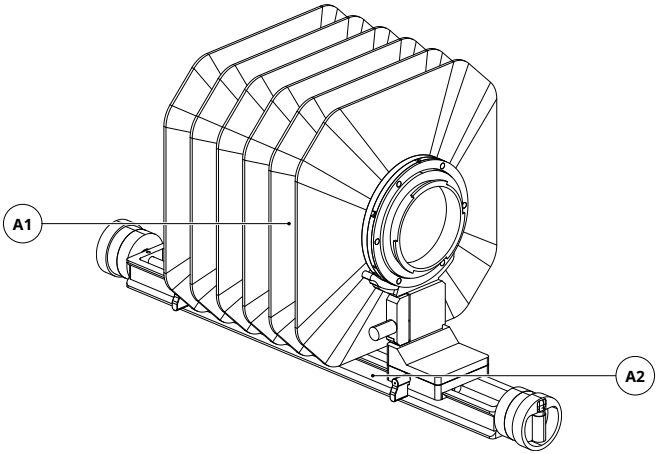

A1 Bellows module

A2 Dual-focus rail module

01 **Secure the support**

Clamp the underside of the rail in a compatible support clamp. Secure it before fitting the lens and camera.

Standard: 350 mm rail and six-fold bellows.
Camera/digital back mount and lens board are selected separately.

Mounting the equipment

Seat both dovetails, then tighten the clamp knobs.

Lens end

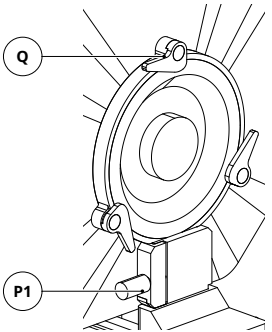

Camera end

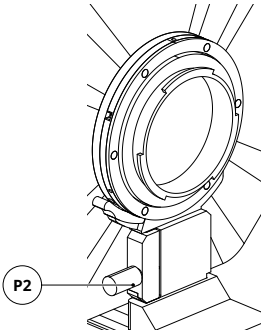

P1 Front bellows clamp knob

P2 Rear bellows clamp knob

Q Lens board latch

01 **Fit the bellows**

Support the bellows and seat both end dovetails in their clamps. Tighten P1 and P2; check that both ends are secure.

02 **Fit the lens and camera**

Seat the matching lens board and secure all Q latches. Attach the camera or digital back using the selected mount; check it is secure.

Independent focusing

Separate lead screws position the lens and camera standards.

Front

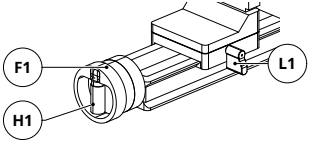

Rear

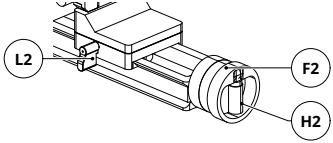

F1 Front focusing dial rim

H1 Front fold-away crank

L1 Front carriage lock lever

F2 Rear focusing dial rim

H2 Rear fold-away crank

L2 Rear carriage lock lever

01 **Release and adjust**

Release the corresponding L lever. Unfold H for longer travel; turn the largest outer rim F for fine adjustment.

02 **Hold the position**

The self-locking lead screw holds the setting. Tighten the corresponding L lever for additional locking as needed.

Both focusing dials: 0.01 mm of linear travel per smallest division.

Landscape and portrait

Press the button; rotate the camera 90° to lock automatically.

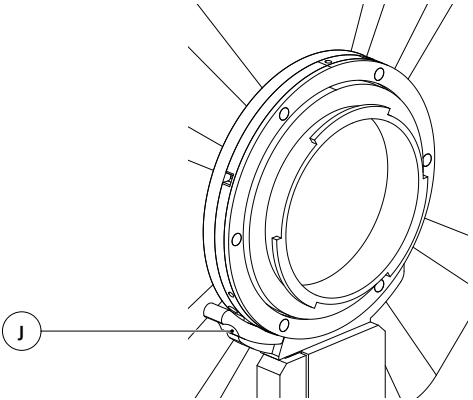

J Camera rotation release button

01 **Support and press**

Support the camera and press the camera rotation release button J.

02 **Rotate and check**

Rotate the camera 90°. It locks automatically in position. Check it is secure before letting go.

Rotating interface shown. The camera/digital back mount matches the selected configuration.

Disassembly and storage

Two modules, assembled and separated by hand.

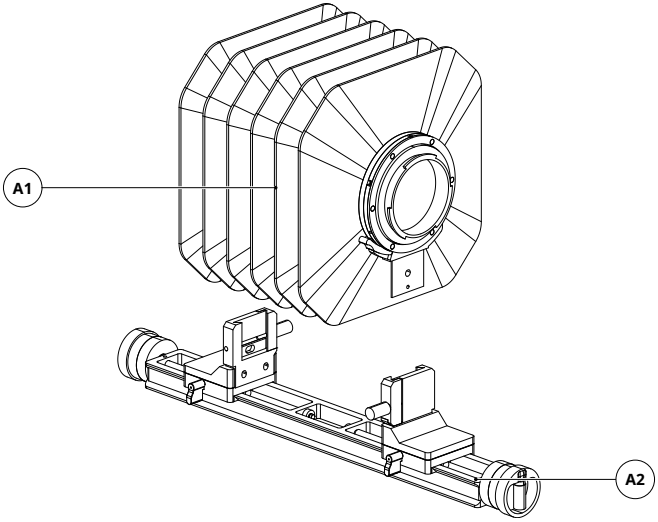

A1 Bellows module

A2 Dual-focus rail module

The bellows and both end interfaces form one module.
Keep the rail, both carriages and both focusing mechanisms together.

Reassembly

Separate the modules at the knob-operated dovetail clamps.

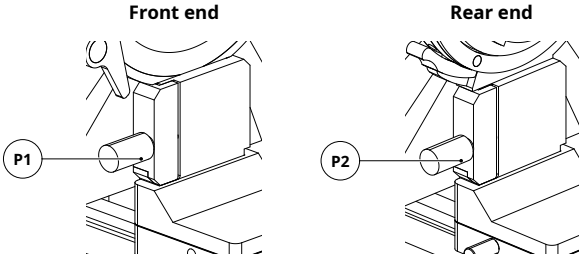

P1 Front bellows clamp knob

P2 Rear bellows clamp knob

01 **Remove the bellows**

Remove the camera and lens. Support the bellows, loosen P1 and P2, then lift both dovetails out of their clamps.

02 **Reassemble**

Clean the mating faces. Seat both ends in the clamps and tighten P1 and P2. Check the connection before attaching equipment.

03 **Pack for storage**

Fold both cranks into the dial profile. Protect the interfaces and bellows, then place each module in its storage position.

Shanghai Shebao Optoelectronic Technology Co., Ltd.
Muhua North Road, Fengxian District
Shanghai, China
www.swebo.us
swebochina@gmail.com