G90

Geared Leveling Head with 90° Tilt Base

User Manual

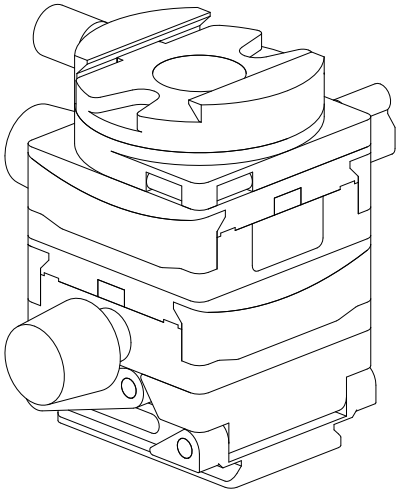

SWEBO

Geared controls and clamp

Secure the camera, then adjust each geared axis.

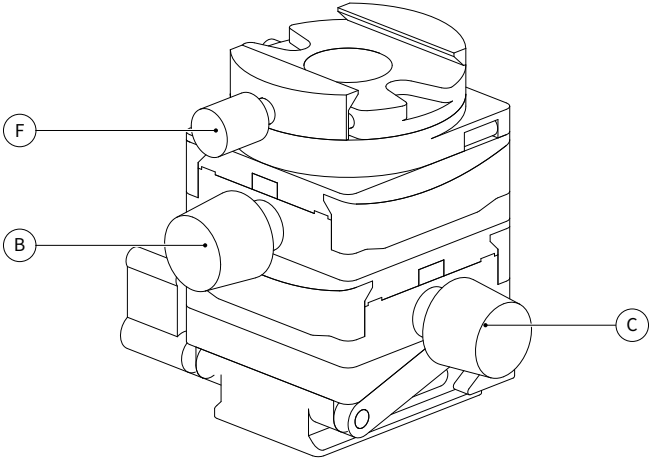

B Upper geared knob

C Lower geared knob

F Clamp locking knob

F secures the camera plate; B and C control the two geared axes.

Mount the head and camera

Secure the base before attaching the camera.

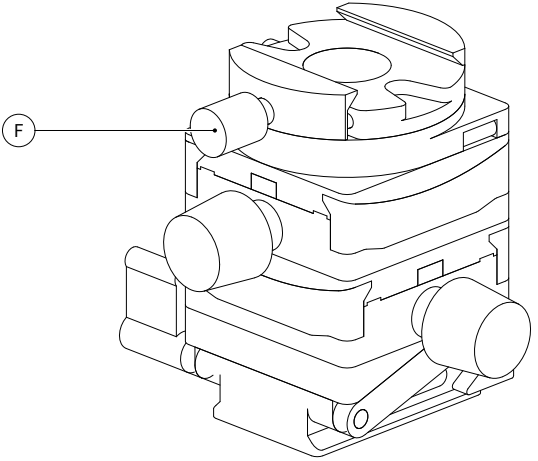

F Clamp locking knob

01 Secure the base

Use the Arca-type base or a 1/4- or 3/8-inch mounting socket.

02 Insert and clamp

Insert the camera plate and tighten F. Check the connection before release.

Two-axis geared leveling

Make small corrections with each geared axis.

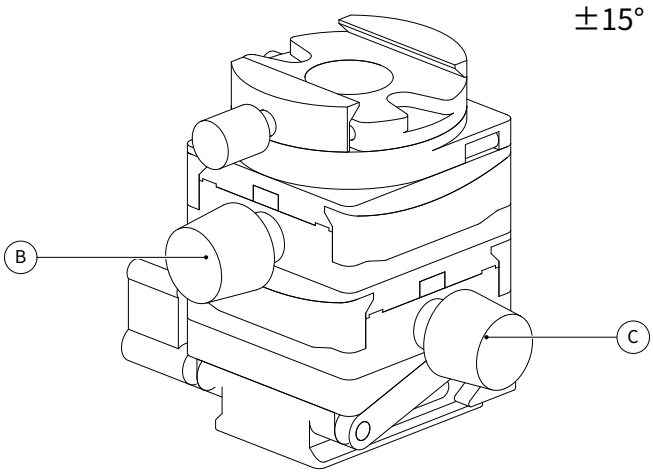

B Upper geared knob

C Lower geared knob

01 Adjust the first axis

Turn upper geared knob B while observing the image.

02 Adjust the second axis

Turn C to correct the other axis. The worm drive holds the setting.

03

Top panning

Level the head, then set the shooting direction.

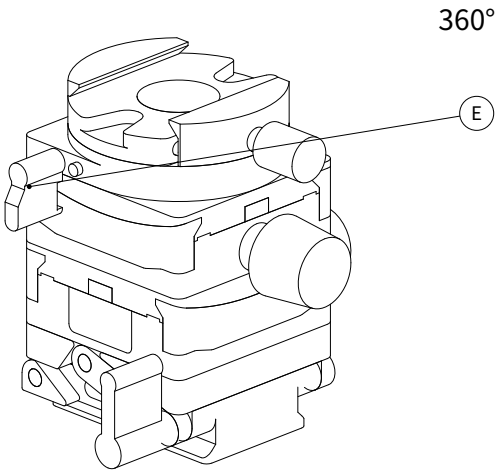

E Panning lock lever

01 Release the panning lock
Support the camera and release the top panning lock lever.

02 Rotate and secure
Turn the clamp by hand, lock it again and check the composition.

Tilt for downward framing

Support the camera while adjusting and locking the tilting base.

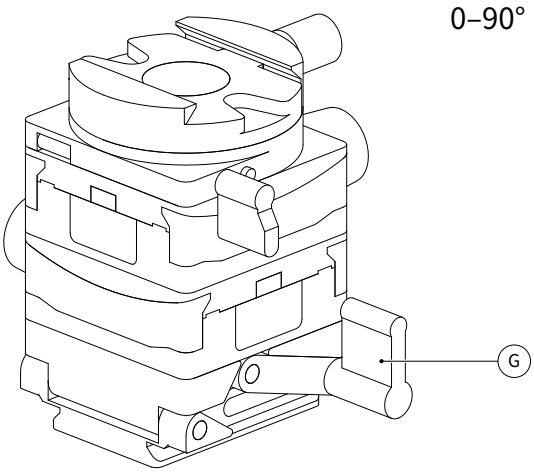

G Base tilt locking lever

01 Support and release

Support the camera and release base tilt lever G.

02 Tilt and lock

Tilt by hand within 0-90°. Secure G before letting go.

Specifications & care

Allow for the complete camera and lens setup.

Recommended maximum load	10 kg
Weight, without plate	798 g
Geared adjustment	±15° on each axis
Top pan	360°, manual
Base mounting	Arca-type / 1/4 in / 3/8 in

Routine care

Keep surfaces and clamping faces clean. Remove the camera for transport and protect the knobs and locks. Routine use requires no maintenance.

Shanghai Shebao Optoelectronic Technology Co., Ltd.
No. 388 Muhua North Road, Fengxian District
Shanghai, China
www.swebo.us
swebochina@gmail.com