DP5

Macro Positioning Rail

User Manual

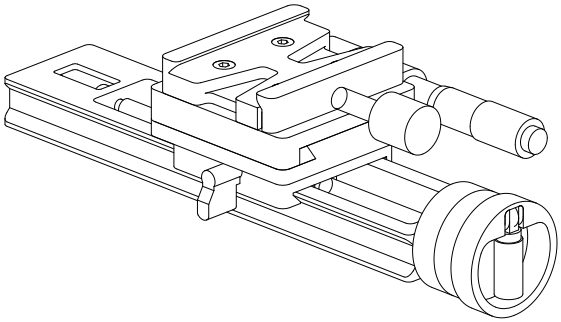

SWEBO

Positioning and fine controls

Position with the main rail, then step with the micrometer.

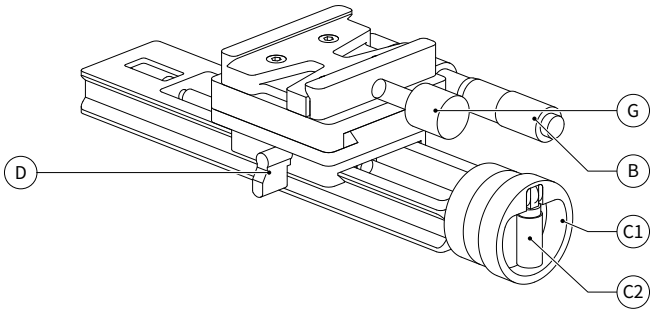

G	Clamp locking knob	B	Micrometer knob
C1	Focusing dial rim	C2	Fold-away crank
D	Rail locking lever		

G clamps the camera plate; D secures the main rail position.

Mounting & orientation

The clamp remains shown on the complete assembly.

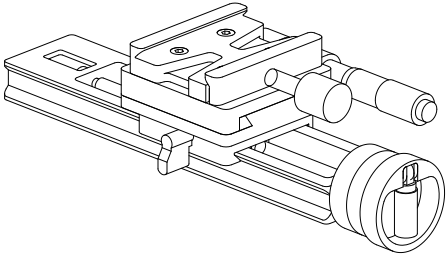

01 Original clamp orientation

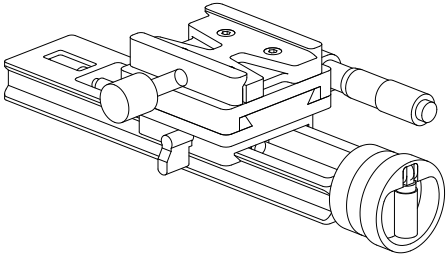

02 Clamp rotated 90°

Secure the support, insert the plate and lock. To change clamp orientation, remove the equipment, remove the clamp, rotate it 90° and refasten.

Rapid and fine focusing

Unfold the crank for rapid travel; turn the rim for fine control.

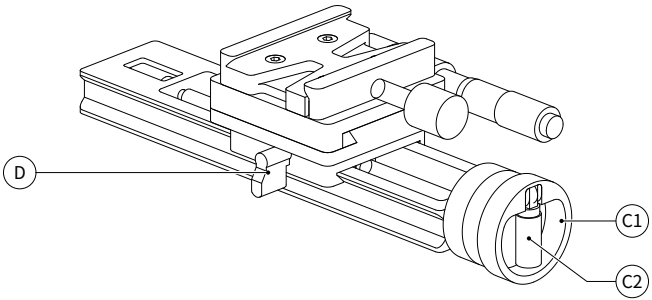

C1 Focusing dial rim

C2 Fold-away crank

D Rail locking lever

01 Move into position

Release D if locked, then unfold C2 for rapid travel.

02 Refine the position

Turn C1 to refine, then secure D.

03

Micrometer positioning

Use micrometer B for fine positioning.

25 mm

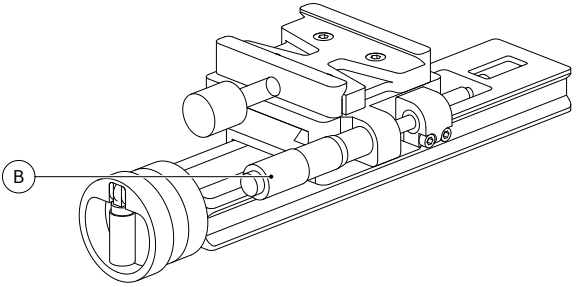

B Micrometer knob

01 Turn the micrometer

Use B to advance or retract in small steps while checking focus.

02 Pause and photograph

The unit holds when you stop turning. Let the image settle before exposure.

0.5 mm/rev · 50 divisions/rev · 0.01 mm/division

Macro focus stacking

Choose the step size for magnification and depth of field.

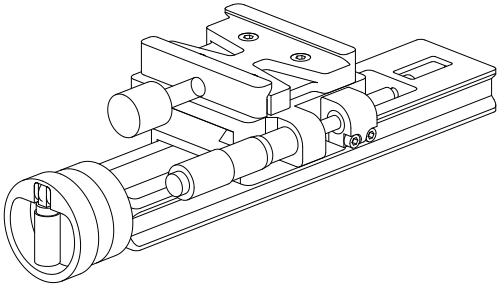

01 Set the starting point

Position and lock the main rail. Refine the starting point with the micrometer.

02 Move and photograph

Move in small steps, allowing the image to settle before each exposure.

03 Combine the frames

Overlap the sharp regions, cover the subject and stack the frames in software.

Specifications & setup

Both positioning units move on the same axis as standard.

Main / fine travel	120 mm / 25 mm
Horizontal / vertical load	10 kg
Length / mounting height	208 mm / 48 mm
Width, including knobs	90.5 mm
Net weight, without plate	620 g

Included and care

Quick-release plate, hex keys and spare screws. The crossed-roller fine unit is driven mechanically in both directions and requires no routine lubrication.

Custom configuration

A version with the two travel directions set at 90° is available to order.

Shanghai Shebao Optoelectronic Technology Co., Ltd.
No. 388 Muhua North Road, Fengxian District
Shanghai, China
www.swebo.us
swebochina@gmail.com